Strainer waste with control handle - Chrome

ELIO

10 712 970 Product version from 10/1/2024

Fits: ELIO, MEM, ENO, SYNC, TARA ULTRA, META SQUARE

- control for single basin
- including adapter for Bowden cable

Not compatible with brushed stainless steel kitchen sinks 38 XXX 004-86.

Fits ELIO, ENO, MEM, META SQUARE, SYNC and TARA ULTRA

Chrome	10 712 970-00
Brushed Platinum	10 712 970-06
Platinum	10 712 970-08
Durabrass (23kt Gold)	10 712 970-09
Dark Chrome	10 712 970-19
Brushed Durabrass (23kt Gold)	10 712 970-28
Matte Black	10 712 970-33
Brushed Bronze	10 712 970-42
Brushed Champagne (22kt Gold)	10 712 970-46
Champagne (22kt Gold)	10 712 970-47
Brushed Chrome	10 712 970-93
Brushed Dark Platinum	10 712 970-99

We reserve the right to change designs, product range and technical specifications without prior notice.
More information can be found at: www.dornbracht.com +49 (0) 2371 8899 900 mail@dornbracht.com

Strainer waste with control handle - Chrome

ELIO

10 712 970 Product version from 10/1/2024

mm [inches]

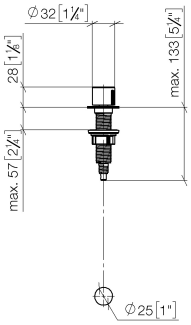

Strainer waste with control handle - Chrome

ELIO

10 712 970 Product version from 10/1/2024

Parts for other finishes can be found here: Brushed Platinum

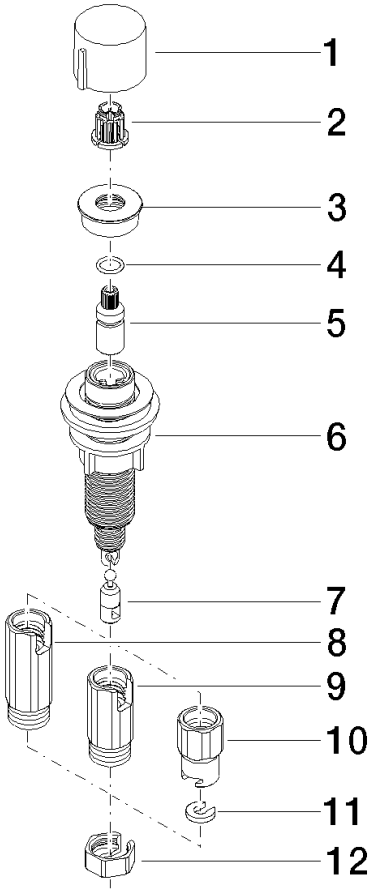

Spare parts list

No.	Item Number	Name	Quantity used	Delivery time
1	09 20 97 030-00	handle	1	10
2	90 12 12 002 00 90	fixing cap	1	2
3	09 27 87 011-00	rosette	1	10
4	09 14 10 042 90	seal	1	2
5	09 29 06 087-00	spindle	1	10
6	04 30 01 029 00 90	adaptor	1	2
7	09 24 03 175 90	adaptor	1	2
8	09 11 10 073-07	connection	1	30
9	09 11 10 074-07	connection	1	30
10	09 11 10 079-07	connection	1	30
11	09 30 11 087 90	disc	1	2
12	09 23 30 024-07	nut	1	30

We reserve the right to change designs, product range and technical specifications without prior notice.
More information can be found at: www.dornbracht.com +49 (0) 2371 8899 900 mail@dornbracht.com